PART #	PART	REQ.	DESCRIPTION
M60101	LATCH	1	BRASS
M60102	T-HANDLE	1	STEEL
M60205	ROTOCLOSER	1	ALUMINUM
SEE CHART	SHELL	1	S/S
SEE CHART	FRAME	1	ANGLE
G	GASKET	1	RUBBER GASKET

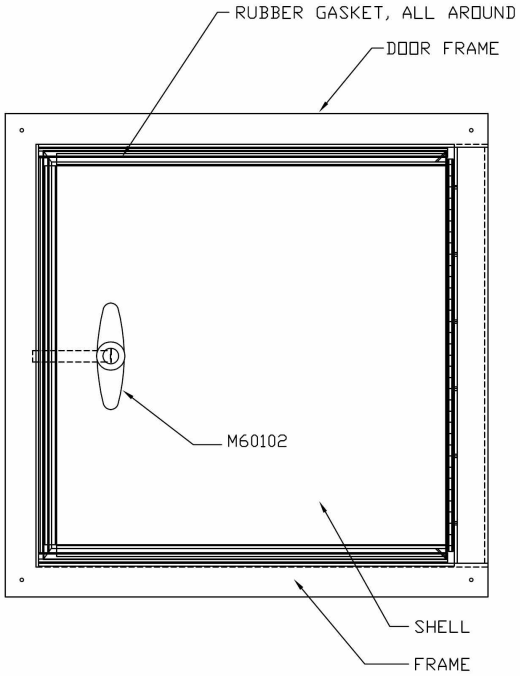

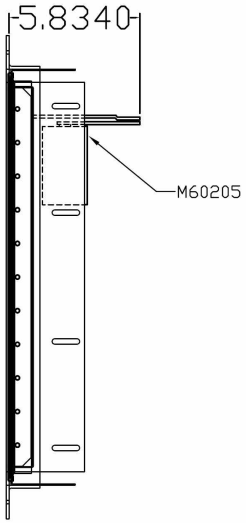

SIDE HINGED HAND OPERATED
CHUTE INTAKE DOOR

SIZE	WALL OPENING (MIN)	INTAKE OPENING	CLOSER	FRAME
15(W) x 15(H)	17"(W) X 15-3/4"(H)	16-3/4"(W) x 15-1/2"(H)	M60205	MB1515F
18(W) x 18(H)	20"(W) X 18-3/4"(H)	19-3/4"(W) x 18-1/2"(H)	M60205	MB1818F
21(W) x 21(H)	23"(W) X 21-3/4"(H)	22-3/4"(W) x 21-1/2"(H)	M60205	MB2121F
24(W) x 24(H)	26"(W) X 24-3/4"(H)	25-3/4"(W) x 24-1/2"(H)	M60205	MB2424F

SIDE HINGED HAND OPERATED
CHUTE INTAKE STYLE "M" DOOR
1 1/2 HOUR UL "B" LABEL

DESCRIPTION	REV.	DATE:	NAME:
DWG: SIDE HINGED DOOR		05-01-09	CGL
	SCALE: N.T.S.	SHEET:	1 OF 1